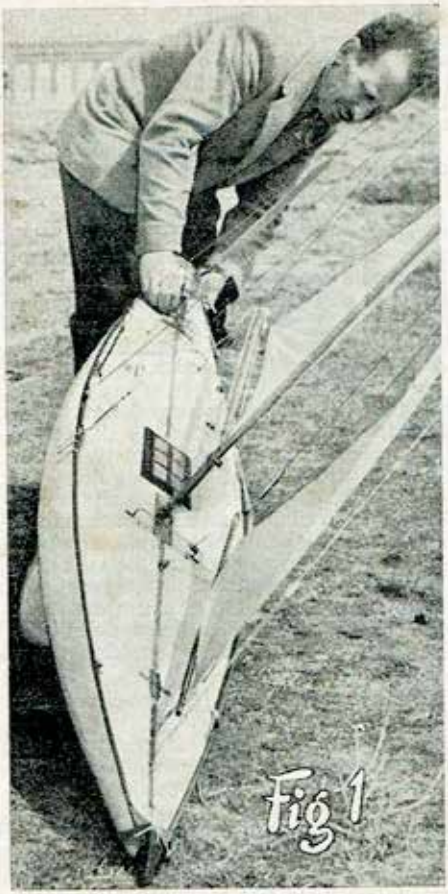

Tuning Up a Model Yacht

by

D. A. MacDONALD

These notes formed part of a series of articles published in 'Model Maker' in 1955-1957 and are reprinted by popular demand.

THE amount of time and effort involved in tuning up a yacht for maximum performance varies very considerably. Some boats reach their peak performance after a few hours of sailing time—others are still not giving of their best even after a season's racing. The time taken depends mainly on two factors. One is the amount of care taken on the design and construction—obviously a boat which has faults will take longer to sort out than one which is free of vices. The efficiency of sails and gear enter into this to a large extent. The second important factor is the way in which the tuning-up process is carried out. If this is done systematically and logically it will obviously produce better results in a given time than will haphazard sailing and random guesswork. The final stages of tuning-up will involve the skipper as much as the yacht, because however perfect a craft may be, the skipper must know its behaviour well enough to be sure exactly what effects will result from any change of trim under any kind of sailing conditions.

The novice who has just completed a new boat is sure to be anxious to get it on the water as quickly as possible. This urge must be restrained. Before the boat leaves the dockyard it must be checked over most carefully. The action of all the gear must be checked and all sails set up, so as to ensure that all suits and spinnakers can be used to best advantage when required. The boat should be tested in a tank, fully rigged, to ensure that it floats on the correct L.W.L. It should not be sailed until the skipper is certain on this point. It should also be put through the process of measuring for conformity with the rating rules. If in any doubt, the owner should call in the club measurer, or other competent person, to assist. Many yachts are launched and laboriously tuned up before being submitted for measurement, with the result that if they are found out of rating and have to be altered the whole or at least part of the tuning process has to be done again. Alterations and possibly remeasurement may, of course, have to be done if the tuning-up process reveals the need for such changes, but an extra measuring operation takes far less time than a repetition of the tuning-up process. Therefore, the practice of measuring first is a valuable insurance.

Assuming the new craft has passed all its "dry-land" tests, she may now be launched on her home water. Most textbooks advise the skipper to choose a warm dry day with a moderate breeze. Unfortunately, in our variable and unpredictable climate, this might mean a very long delay for the man who has other calls on his time, so in practice it is usually a case of making the best of what conditions are available and using each opportunity of sailing to the best effect. Yachts with cloth sails should, however, not be sailed in wet (even damp) or very windy weather until the sails have been fully stretched out. Until the sails are fully stretched the yacht will not trim or handle correctly to windward, so it should be remembered that the later stages of tuning "on the wind" should not be attempted until the sails have attained their correct form. The method of stretching new sails is as follows:

(1) Ensure that all standing rigging is correctly set up and perfectly taut.
(2) Set the jib. Halliard and clew outhaul should be set gently so that there is a minimum of strain on the sail. If there is a jib kicking strap, this should be set so that some rise of the boom is allowed.
(3) Set the mainsail. The luff should not be hooked to a jack stay. The halliard is set so that the luff is only gently taut, and the same applies to the outhaul. The kicking strap should also be fairly slack.
(4) A spiral cord lacing should be used on the luff, but left sufficiently slack so that the sail is not pulled in to the mast but allowed to retain the hollow in the luff which it naturally assumes when set up as in (3) above.
(5) The yacht is sailed on one or two boards close-hauled, and trimmed to sail full-and-bye, not too high in the wind.
(6) It will soon be found that the main halliard can be tightened. When this is done it will be seen that the hollow gap between mast and luff is reduced, and the slack in the lacing can be taken up, but without pulling the luff out of its natural curve. The jib halliard can also be taken up slightly and the outhauls adjusted as necessary.
(7) The yacht is again sailed for a time, as in para. (5), and the process of para. (6) repeated.
(8) When the sail is fully stretched, the mainsail luff will lie naturally snug to the mast, and it can then be hooked to its jackstay without developing creases. The jib will have lost any slight creases which appeared when first set up.

Fig. 1, on front page, shows J. Anderton (M.Y.S.A.), with 'Arabesque' one-time winner of the British A Class Championship. Fig. 2, left, is a sketch taken from a photograph, and shows the correct relative curves of the leaches of jib and main.

(9) It is likely that on a second outing the sails will have tended to shrink back slightly, and the lacing may have to be used again, until the sail has permanently acquired its final shape.

The first and most important step in the tuning-up process is to establish the mast position. In the past this has often been a difficult process and, in fact, many yachts had to make considerable use of the adjustable mast arrangements to allow alteration of position and rake for various sailing conditions. Better hull balance and the assistance given by vane steering gears have made the mast position less critical, but it is none the less necessary to find the optimum position for windward sailing in order to derive the maximum efficiency from sails and steering gear. To determine mast position the yacht should be sailed close-hauled, and I recommend that the position be established by sailing on a light breeze, and checked again when sailing close-hauled in a fresh to strong wind.

For the first test the mast should be set up in the designed position, with the amount of rake indicated on the design. The standing rigging should be really taut, with particular attention to the jib stay, and the mast should be dead straight, with no tendency to lean to either side. Assuming we have a slight breeze, the jib and main sheets should be set so that the boom angles are in the theoretically correct position for sailing close to the wind. Assuming the yacht is fitted out in accordance with normal practice, this means that the sheets are set so the boom lies just outside the ends of the horses, the jib being a shade freer than the main. To set the main kicking strap, pull the boom down until the leach of the sail is quite taut,

and then allow the boom to rise until the clew of the sail lifts by about ⅛ in. for every 10 in. of length on the foot. With the yacht held in an upright position, and pointing so that the wind strikes normally on the sails, set the jib kicking strap (if fitted) or adjust the position of the deck hook on the jib boom, so that the leach of the jib, when viewed from astern, forms a curve parallel with the leach of the mainsail. The rig now consists of two airfoils, virtually parallel in both horizontal and vertical planes, giving a gap or slot of uniform width along its length. The clew outhauls should be adjusted to provide a slight camber (or flow) at the foot of the sail.

In Fig. 1 we see an experienced skipper carrying out this operation of trimming for windward sailing. Note how the yacht is held in the wind—as nearly as possible as if it were sailing, and the skipper sights along the sails from astern, making sure that the sails are in fact lying in parallel curved planes. Note also that the angles of the booms are set in relation to the horses in accordance with the instruction given above, and observe the slight camber imparted to the foot of the mainsail, by adjusting the outhaul. Fig. 2 shows a nicely trimmed yacht sailing in a very light breeze—the lift of the main and jib booms is perhaps rather more than advised above, but this serves to accentuate my point about the parallel curves on the leach of both main and jib. It is worth considerable care to get this sail trim just right, and a waste of time trying to get the best out of a boat until such a trim can be achieved.

When the skipper is completely satisfied that the sail trim is correct in every respect for maximum efficiency, the vane steering linkage pin should be removed and the tiller locked central. A very taut tension on the centring line could be used for this purpose, but it must effectively prevent any tendency for the rudder to rise or fall when the yacht is heeled. The vane rotor should be set in line with the linkage arm with the feather aft. The vane gear will now take up something like its normal position when sailing, but will not actuate the tiller. The yacht should now be put off, full-and-bye, with a slight imparted way, into a light breeze, and its behaviour noticed very carefully. Normally it will do either of two things:

(1) It may continue to sail full-and-bye, but slowly falling off the wind until its course becomes something more like a reach.
(2) It may turn up slowly into the wind, until the jib spills wind and shakes, whereupon the boat goes "into irons".

Whichever happens, the boat should be taken back to the starting point and the process repeated, but sailing on the other tack. The yacht should exactly repeat its previous performance. If it does not (*e g.*, turns into the wind on one tack and falls off on the other) the yacht is out of lines in some respect, and the rudder should be checked and re-aligned as necessary until the boat behaves (as near as can be judged at this stage) in the same way on both tacks. It is worth repeating these tests a number of times, to be absolutely sure that the behaviour is identical on both tacks, and no further operations should be tempted until this condition is achieved.

If the yacht is found to have a general inclination to fall away, and not point up to the wind when correctly trimmed, the mast should be moved aft. If on the other hand the boat goes into irons, or sails so close to the wind that the sails continually spill wind, the mast should be moved forward. The amount of movement required depends on how seriously the yacht is off course and also, of course, on the length of the yacht itself. A trial movement of ¾ in. should be made and the effect noted. Subsequent movements may be either greater or less as required. The performance to

be aimed at, at this stage, should be such that the yacht sails to windward, but so close that the sails are on the point of spilling wind. In fact the sort of performance which two or three degrees of weather helm would be required to correct. It is worth spending quite a lot of time and care achieving this result, since it will ensure that the vane gear, when brought into use, will be operating under its proper conditions—in fact doing just the job it is intended to do, and no more.

The mast position obtained in this way will need to be checked at the first opportunity in a fresh breeze. The boom settings will be the same, but the kicking strap will need to be set a shade harder. If the yacht is very accurately balanced, it will sail in the same way with this trim in a stronger wind. Most probably, however, it will go into irons rather more readily. If this tendency is very marked it will be advisable to establish a new optimum mast position for the stronger wind (being careful to mark or record the light wind position). If the two optimum positions are reasonably close together (say within ⅜ in. or less for an "M" class yacht or larger), then a compromise intermediate position may be adopted, and later modified slightly as required in the light of future experience. If the optimum mast positions differ widely (and I have known cases of more than 2 in. difference), the yacht is liable to be troublesome to sail. I hope to give some information later on dealing with awkward cases of this kind.

Having established our mast position, we can now proceed to the process of setting up the vane steering gear. Let us first of all adopt a very simple (though, as we shall see later, not strictly accurate) conception of how the gear works. If the yacht is held on a course beam-on to the wind, and the bar of the vane gear is turned on the rotor to a position such that, with the feather lying away from the wind, the tiller is central (as in Fig. 3), we can see that if the yacht hull is now turned towards the wind, the tiller will take up a new position such as to give weather helm. If the linkage ratio were 1:1 (i.e. linkage pin halfway between vane pintle and rudder post), 10 deg. deviation from the original course would apply 10 deg. of helm. With the more common linkage ratio of 2:1 (i.e. short linkage arm and long tiller arm) the amount of helm correction would be 5 deg. If the yacht is turned 10 deg. off the wind, the gear will similarly provide 5 deg. of lee helm, assuming the linkage ratio is still 2:1. This linkage ratio is one which we shall have to experiment with, until we find the best value for the particular yacht. I suggest that for the start of the tuning-up operation it be set at 2:1, with a feather of approximately five times the area of the rudder.

This simple conception of how the gear works gives us an equally simple rule-of-thumb method for setting the vane angle for any desired course, as follows:

(1) Hold the yacht on the desired course.
(2) Hold the tiller arm central.
(3) Rotate the bar of the gear so that the tail edge of the feather is pointing away from the wind.

Then assuming that the wind stayed in that direction and the yacht stayed on the selected course, the tiller would remain central. If, however, the yacht tended to deviate from course, the vane would still remain at the same angle to the wind, and the deviation from course will thus result in the application of a correcting angle of helm applied to the tiller. This tiller angle would be equal to half the angle of deviation from course. The gear in this way acts as a form of servo mechanism, applying a proportion (dependent on linkage ratio) of the deviation angle as a correction to the tiller.

If the skipper has never sailed a yacht with vane gear before (or if he

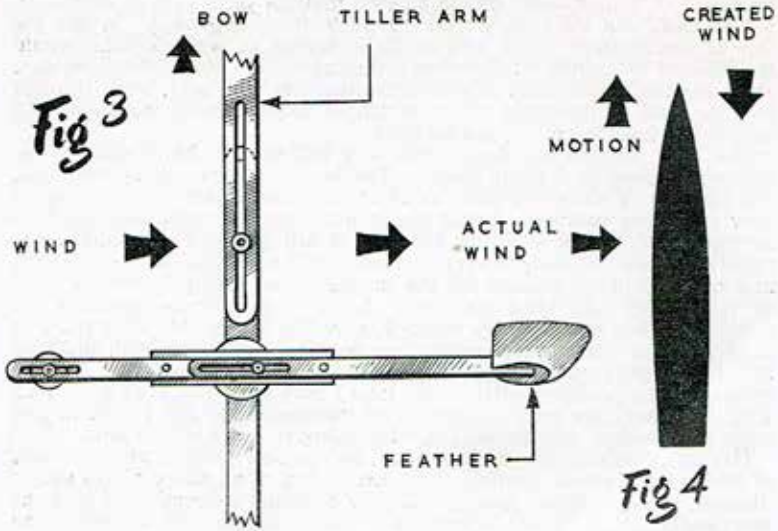

has, without understanding much about it), I suggest that he now proceeds to sail a few trial courses, using this simple technique of vane angle setting, and note the results. This should be done in a light to moderate wind, to ensure that the gear is at no time overpowered, but at the same time has enough windpower to make its operation non-critical. The sails are, of course, trimmed for each course being sailed, and trial runs should be made on beating, reaching, quartering and running courses. The object at this stage is not to attempt to sail any particular course accurately or to the best advantage, but to familiarise the skipper with the general handling of the gear. Some practice at retrimming on shore will also help in this direction.

One effect which should soon become apparent (assuming the gear is working even reasonably well) is that the yacht sails on courses appreciably freer than the courses for which the vane gear was set. For example, with the gear set to give zero helm with the vane athwartships the yacht will sail not at 90 deg. to the wind, but at a greater angle—100 deg. or more. A few practice runs will show how to make the correct vane setting, which for an accurate course does, in fact, differ from that "guess-timated" by the foregoing simple rule. For running dead before the wind the simple rule gives nearly the right answer, but the error becomes greater on courses with the wind more abeam, and is still apparent as the yacht is close-hauled, for a wind more ahead.

There are, therefore, certain factors to be studied, which complicate the process of setting the gear for an accurate course in relation to the direction of the wind. We must now attempt to understand these factors so that we can assess and allow for them when we attempt more precise course-setting. Reverting to our first illustration (Fig. 3), the yacht is stationary, on a course with the wind exactly abeam, the vane feather at 90 deg., and the tiller central. The yacht now begins to move forward on its course. In doing so, it creates, by its own motion, the effect of a wind

from dead ahead, and this "created" wind will affect the vane feather. The speed of this extra "wind" is the same as the speed of movement of the yacht, so that the force acting on the feather increases with forward speed. (See Fig. 4). The feather is now controlled by two wind forces simultaneously, i.e. the true wind, represented by the line of force OT in Fig. 5, and the "created" wind, represented by the line OC. The result of this combination is the "apparent" wind, represented by the resultant line of force OA, which differs in direction from the true wind (OT). It is on this apparent wind (which comes from a source more ahead than the true wind) that the yacht will sail, and the vane gear will operate. This accounts for the fact that when the gear is set for the true wind, the yacht sails rather more free than anticipated. If the wind force increased, and the yacht did not increase speed, the new line of force (OT') would be greater and the apparent wind (OA') would be nearer in direction to the true wind. If, however, the increase in wind force produced a corresponding increase in the speed of the yacht, the line of force OC would also increase, and the direction of the apparent wind would be unchanged. Over a range of speeds well below the maximum speed of the hull, it is reasonable to assume that the yacht's speed increases aproximately in step with the wind speed, so that unless the yacht is either overdriven or almost becalmed, the direction of the apparent wind is nearly enough constant in relation to that of the true wind, despite variations in wind force, provided the yacht's trim and behaviour are unchanged by variations in wind force. A very fast yacht will create an apparent wind very much ahead of the true wind, but for a small, slow-moving craft, the apparent wind is only slightly ahead of the true wind. For this reason, small models appear to sail closer to the wind than a full-size craft, since the latter has to cope with an apparent wind much farther ahead than the true one.

The next effect of the yacht's forward motion is to produce a "slipstream" of water past the rudder tending to pull it central, and so opposing the efforts of the steering gear to apply helm. If the rudder area is large, and the vane feather and its leverage power small, the effect of the slipstream on steering is considerable. The power of the slipstream increases with speed, so that when running fast before the wind, the effort required to turn the rudder against the slipstream is quite great. This in itself could prevent any but the most powerful vane gear working at all, were it not for a third effect which comes to our rescue.

This third effect is that as the yacht's speed increases, the turning power of a given rudder deflection increases. This would mean that if the steering gear was all-powerful, and unaffected by slipstream effects, the helm correction applied in a light wind for a given deviation from course would be excessive in a stronger wind. This third effect can be clearly seen in a yacht sailing with permanent helm (i.e. tiller locked a few degrees off centre). In a light wind the fixed helm turns the boat only slightly, but when the boat's speed increases, it runs right off course.

From the foregoing, we see that it is necessary to balance out the second and third effects so that they cancel, i.e. the reduction in applied helm due to the slipstream is equal to the reduction required by the increase in forward speed. To do this we use the two factors remaining under our control, firstly the power of the vane feather (its size and leverage), and secondly, the linking ratio. We should be fortunate indeed if we were able to establish a feather size and a ratio which together produced the ideal result under all conditions.

Some experienced skippers change feather size and linkage ratio as required to suit varying conditions, but fortunately the number of occasions when this treatment is necessary is small, so the novice can expect to find

a reasonable compromise which will enable him to cope with all normal conditions by normal adjustments. He will, however, need to carry out a number of tests to find the best operating conditions, and I recommend a course of action based on the following considerations.

First, let us take the case of a yacht running at speed before a strong, true wind. Only a small rudder deflection is required to maintain the course, but the slipstream pressure is very great. In this case we need a high linkage ratio and a powerful feather, to apply the necessary small angle, and hold it against the slipstream. I suggest that the first available opportunity be taken of sailing under these conditions, in order to establish the power of the steering gear. The yacht should be put off before a strong wind, with no spinnaker, and the vane feather set dead fore-and-aft. She should preferably set off goose-winged. A linkage ratio of 2:1 should be adopted for the first test, for a boat of normal type; for a boat with unusual rudder arrangements, the ratio should be varied accordingly. If the gear has insufficient power, the yacht will turn quickly off course, and proceed on a broad reach, spilling wind from the mainsail, and heading for the weather shore. It will be found necessary to set the vane feather well to windward of amidships to hold her on a course anywhere near a true run. An increase in feather size, possibly with a small increase in linkage ratio, is required. When the power is adequate, the yacht should sail very nearly before the wind, and a vane setting of about 3-5 deg. to weather of amidships should hold her on a goose-winged course. The feather size and linkage ratio should not be increased beyond the point necessary to achieve this result. The centring tension line should be inoperative for this test which will give us the correct conditions for running before the wind.

The opposite extreme condition is sailing to windward in a light air. There should be sufficient wind to ensure that the yacht has steerage way at all times. For this condition of sailing, the slipstream has little power to oppose the steering gear, and the amount of helm applied to hold her on course might be quite considerable, especially if the "best compromise" mast position is one which allows her to fall off the wind slightly in light airs. The gear should be set up with the feather and linkage adopted as the result of the first test, and the vane angle set to 30 deg. The yacht should now sail correctly to windward. with the sails trimmed as described previously, though perhaps not quite as close to the wind as she would in a fresher breeze. It should not be necessary to reduce the vane angle to less than about 25 deg. to hold her up to any wind which provides steerage way. If the yacht fails to pass this test, the feather size should be increased. The linkage ratio established by the running test should be retained if possible—increase of feather size will not materially affect the results obtained in the previous running test. If reasonable increases in feather size do not produce the desired result, it will be a regrettable necessity to compromise on linkage ratio, and reduce this. The reduction made should be the absolute minimum necessary. If such changes are made, the running test should be repeated at the next opportunity, and a final compromise between the conflicting requirements adopted, if necessary.

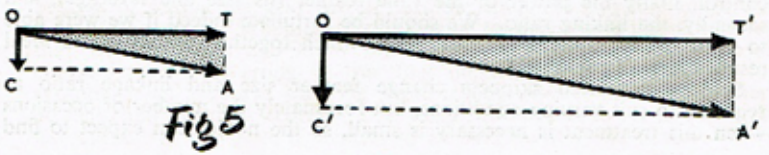

Fig 5

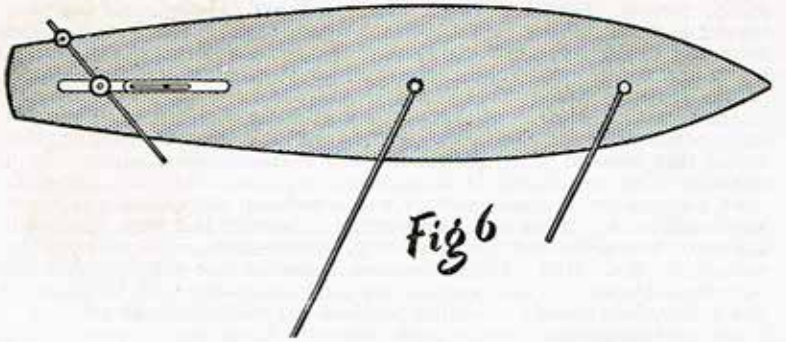
Fig 6

Two further tests are required to prove its all-round performance. One is in a moderate variable wind (such as we encounter on sheltered inland waters, where obstacles split the wind). This will test the responsiveness of the gear to wind changes. It is more likely, having passed the previous tests, to be over sensitive rather than unresponsive, and might thus tend to cause the yacht to sail an unnecessarily long and even erratic course. What tends to happen is that a change of wind direction causes the vane gear to move quickly, and "overshoot", i.e. swing beyond the optimum point, over-steering the yacht, and then swing violently back, when the yacht has gone too far off course. This "hunting" action is characteristic of all servo systems. In elaborate equipment, devices are used to damp out or cancel the tendency to over-swing, but on a simple device like the vane gear, we have to suffer this defect, and minimise it as far as possible by simple means. If all the parts of the gear are heavy, such overswings are likely to be greater than on a lightweight gear, and this emphasises the need for reducing weight as much as possible. A "sticky" pintle or tiller movement will cause similar effects. The centring tension line can be used to provide "damping" to the vane action, and this, used in moderation, with a slight additional helm imparted by vane angle adjustment, should enable a reasonable course to be sailed. A large feather and small linkage ratio would lead to trouble on these variable winds, so this test is also a cross-check on the decisions made in the previous one, in respect of feather size and linkage ratio.

If a reasonable course can be sailed, with the vane feather moving gently but positively with each change of wind direction, the yacht can be passed for the next test. For this check we need a strong, preferably gusty, quartering wind. This is the most difficult point of sailing with the vane gear, and the one where the tension line can be of great value. The course-holding qualities of yachts (apart from their steering gears) vary widely under these conditions. In general, the shallow beamy type performs well, and craft with their keel deadwood centred well aft also steer better under these conditions. The deep narrow hull, however, tends to heel excessively, and the yacht dips its mainboom in gusts. As a result it tends to broach easily. So it would appear that this test is one concerning the hull rather than the steering gear, but the fact remains that whatever the natural tendencies of the craft, we still have to make the best use of the steering gear under these conditions.

As a first trial, the yacht should be set up with its sails trimmed to sail with a wind on the quarter (i.e. a "true" wind 135 deg. or so from the

yacht's course). Both booms will be set at about 145 deg., and the vane feather at about 50 deg. to its forward centre position (see Fig. 6). The behaviour of the yacht, as she sails, should now be noted carefully. If she holds her course well in heavy gusts, we are indeed fortunate—most probably, however, she will luff considerably in the squalls and fall away whenever the wind force drops. If so, the tensioner should now be brought into operation, and the vane feather removed a few degrees forward. This means that between gusts, the tension will overcome the additional helm resulting from the change in vane angle. In squalls however, the extra wind pressure on the vane feather will overcome the tension and apply additional helm. If we can easily secure a trim in this way which will enable us to sail the course satisfactorily, we can consider the gear to have passed this test. If it fails, an increase in feather size will be necessary. Note that this test and the previous one are concerned mainly with feather size rather than linkage ratio; the previous test might indicate a need for a smaller feather, and this test might suggest a larger one. The conclusion may be reached that an overall compromise is impossible, and alternative feathers for extreme conditions may become necessary. It is worth repeating some of the previous tests to obtain an overall compromise, but with some yachts it may not be possible. I know of at least one very successful yacht in this category, and although capable of performing satisfactorily under all conditions it needs a choice of three feathers to do so.

Having carried out as thoroughly and systematically as possible all the foregoing tests we shall end up with either of the following two sets of conditions:

(1) We have a feather size and linkage ratio which give an adequate performance under all normal conditions, and, with care in setting and in the use of the tension line, we can do all we need without altering either.

(2) We have certain conditions which need an alternative feather, and/or a change in linkage ratio. We have learned from our tests what those conditions are, and what changes are necessary when they arise.

From this point onwards, the tuning-up operations comprise attention to finer points of sail trimming and vane adjustments, and the acquiring of greater familiarity with the behaviour of the yacht under varying conditions.

We have now carried our tuning-up operations to the point when the yacht can be said to sail efficiently on all courses. If the craft is intended for racing, we can now begin to assess its standard of performance by direct comparison. By comparative tests, we can perfect our tuning-up by giving attention to those final details which make all the difference between a first-class and a second-rate standard of performance. For these comparative tests we need a "trial horse". If our yacht has been built to a published design, the ideal "trial horse" will be a yacht of known good performance built to the same lines. Alternatively, a yacht of similar characteristics, i.e. approximately similar hull form, displacement and sailplan, will serve the purpose. In any case, the trial horse should preferably have nothing freakish about it—exceptionally good or bad performance under certain conditions could make comparative trials meaningless, and peculiarities in the behaviour of the "trial horse" could prove very misleading. Needless to state, the skipper of the selected craft should also be co-operative to the extent of being ready to take part in the trials. It is probable that trial runs with a number of craft will be necessary, since no one craft may be available over an extended period of tests.

It is not possible to lay down any specific programme for these comparative tests, since the requirements may vary considerably. Obviously most attention will have to be given to points of sailing on which the new yacht appears, by comparison, to be below standard. In general, however, the trials should consist of sailing a number of boards on various courses in relation to the wind, the relative performance of the yachts being carefully studied on each board, and changes of trim tried out with a view to improving the performance a little at a time as the trials proceed.

Good sailing conditions are essential for these tests, and it is better to protract them over a period and avoid the possibility of being misled by uncertain winds, rather than to try cramming as much tuning-up as possible into a short period, regardless of conditions. The windward performance of the yacht should receive first consideration. After one or two boards it will be obvious whether the new boat is superior or inferior to the "trial horse". If it does prove superior, this should not allow us to be complacent—every effort should be made to increase the margin of superiority as far as possible.

In studying the relative behaviour of the two yachts, their action should be watched from a number of points. Watching the course from the starting and finishing ends, we can see which yacht is making most leeway, and which is sailing the straightest and shortest course. By following the progress of the yachts along lee and weather shores, the closest possible watch can be made over the reactions of the yacht to wind variations. On no account should the tuning-up boards be allowed to become competitive —far too much time is lost by tuning-up sailing developing into racing, with more regard paid to making the line first than to the study of the behaviour of the boats.

Fig. 7 shows some of the effects which may be observed. In diagram A, the yacht X; although appearing to sail faster than Y, is none the less beaten at the first turn, although started in the weather berth. Viewed from astern it would have been clearly seen that the yacht was following a "wavy" course, luffing on each puff of wind, and afterwards paying off. The course travelled is thus longer than the straight course of Y, and although greater speed was being developed, this was offset by the greater distance travelled. This sort of course would result from a vane gear set to too wide an angle, and/or sheets trimmed too close.

In diagram B, we have a reverse condition—again sail trim and steering gear setting are in disharmony. The rudder is attempting to steer this boat too high in the wind. When this happens the boat loses speed, the sails spill wind, the yacht falters, and pays off again to the course for which the sails are set. In diagram C, we have the same effect in a much reduced form. This sort of course is a very common occurrence, the turn into the wind being very slow, so that at first the yacht X appears to be genuinely

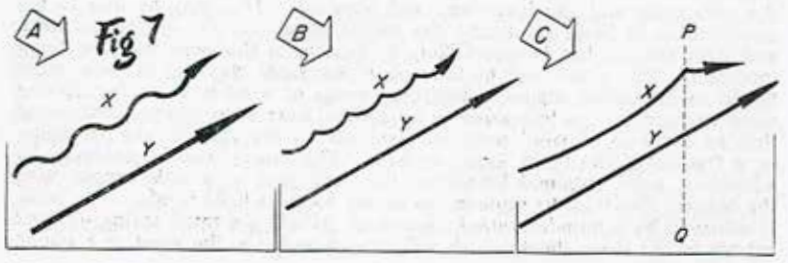

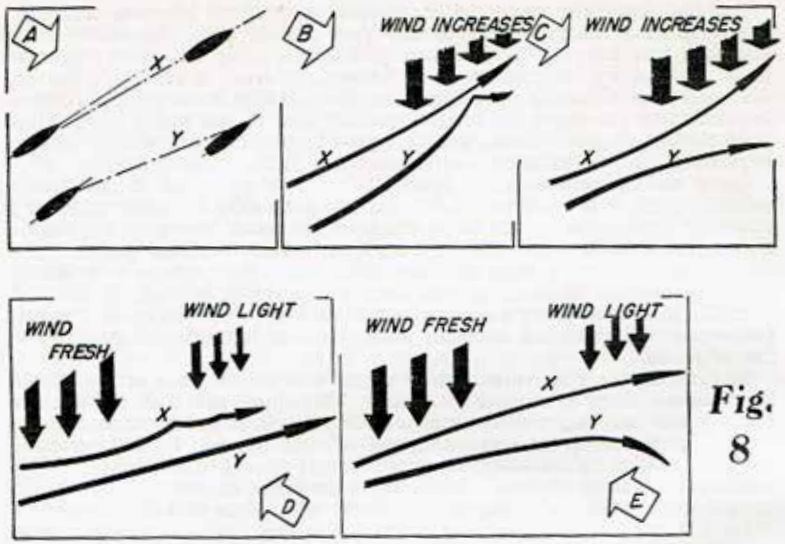

Fig. 8

sailing fast and straight, and higher in the wind than Y. Were the windward leg a shorter one, i.e., on a narrow sailing water, X would probably beat Y with this trim. This can be seen from the diagram which shows an imaginary shore line at PQ. A turn at this point would give X a very good lead. Small differences in trim between the yachts can therefore affect performance materially and the maximum care and observation should be used, to assess correctly the meaning of results obtained during these tuning-up boards.

In Fig. 8a, we have yacht X making distinct leeway. This leeway is accompanied by a lack of forward speed. There are two main causes for this effect: either the yacht is overpowered (and this will be apparent from the angle of heel), or the sails are trimmed incorrectly—i.e. sheets too close and/or kicking strap too tight. A comparison can be made between the sail trim of the two craft to establish the cause of this trouble. In Fig. 8b, we have a case of two yachts reacting in different ways to an increase of wind pressure. Yacht X sails smoothly through the squall, luffing just slightly into the wind. Yacht Y turns into the wind more sharply, until the sails spill, and she loses way and pays off. This may be due to the same causes as those producing the results shown in Fig. 7b (excess helm and tight sheets), but is more likely to be due to the mast position being incorrect. This could well be the case if the yacht was one of those mentioned in an earlier chapter, requiring change of mast position for varying wind strengths. The technique to be applied here is to arrange matters so that an increase of wind pressure produces an increase of weather helm, or a freeing of the main sheet, or both. The former can be achieved by additional helm obtained by setting the vane gear to a wider angle, with the tension line used to remove the excess helm in light winds. The latter is achieved by a time-honoured process of including a small spring or stout rubber in the main sheet, which will stretch and free the sheet in a strong

puff of wind. This latter gadget, although scorned by most skippers of today, is none the less a valuable tool in cases where there is serious unbalance in the boat.

In Fig. 8c we have a case of "bolting" in a strong wind. This behaviour is usually accomplished by the reverse action (shown in Fig. 8d) when the wind lightens. A simple cause of this fault may be in the vane self-tacking gear. If the vane feather and its counterbalance are light in weight, but the inner parts of the self-tacking gear are heavy, the "toggle" action of the self-tacker will be lost. This means the gear will not fully open until a great angle of heel is reached, and will not remain fully open, when the yacht comes upright. A light tension spring between the forward edge of the vane feather and a point on the weight arm is often necessary to ensure a reliable toggle action. To check whether this is the fault, the yacht should be sailed with a fixed vane at the appropriate angle for the course. A check should also be made to ensure that the vane gear, as trimmed for the course, is "flotation-balanced". If the vane gear is above suspicion, and the behaviour is the same on both tacks, the cause is a design fault or an inaccuracy in hull construction. A "gimmick" to reduce this trouble is a spring in the jib sheet, which gives a luffing tendency to counteract the tendency to bolt. I know of two yachts which bolt quite violently in strong winds but have been tamed by their expert skippers to the extent that they perform very successfully in open racing.

Finally in Fig. 8e, we have the yacht which falls away in a light wind. This is the most common form of misbehaviour, and, in fact, a perfectly balanced yacht will do this to some extent. This effect is probably associated with the tendency to luff excessively in a squall, as shown in Fig. 8b, and the treatment of one fault may well cure both. If no results are achieved by simple means already indicated, the skipper must resign himself to a situation where the mast position will have to be varied for best results under each set of sailing conditions. In mild cases, however, a change of vane angle is all that will be necessary to provide sufficient correction. It will now be obvious from the foregoing that we are, in effect, attempting to tune the new yacht up to the standard of performance indicated by our exemplary yacht in the drawings of Figs. 7 and 8. No doubt our "trial horse" will itself fall short of perfection to some extent, but if it is a good yacht of the same type as our own, we shall have quite a bit to learn to excel its performance. The tuning up experience will serve three main purposes:

(1) To reveal any remaining defects in the equipment of the yacht;
(2) To carry the preliminary tuning up operations to a more final stage, and bring the yacht up near to its ultimate standard of performance;
(3) To familiarise the skipper with the effects of small changes in trim, and establish the best trim for windward sailing under various conditions.

Very little tuning-up is normally required for downwind sailing. Speed is determined by the characteristics of the yacht and the efficiency of the sails rather than by minute variations of trim. A straight course is dependent on the efficiency of the steering gear, and the main purpose to be served by sailing down-wind against a "trial horse" will be to check that the operations on the vane gear carried out previously were done correctly. The opportunity of down-wind sailing should however be used to the best advantage to practise the setting of spinnakers (both balloon and flat). The effect of the mainsail kicking strap on down-wind sailing should also be studied. On some yachts it is necessary to slacken the kicking strap appreciably for running before the wind, either to increase the drive in light airs, or to prevent broaching in squalls. Comparison trials with an

opponent of known merit will naturally help towards determining the best method of dealing with these problems. It is worth carrying out careful practice in the setting of spinnakers for quartering winds. The general principle is to set a balloon with an appreciable topping lift, and the boom squared off, when the wind is astern. On a quartering wind, the topping lift is discarded, and the boom held well forward and hard down. The correct technique for varying directions and strengths of wind can only be worked out by continued practice.

The technique for maximum performance on reaching winds will vary considerably according to the characteristics of the particular yacht, and, again, continued cut-and-try methods of tuning up are necessary to establish the best technique. In general it may be said that yachts with low aspect ratio sailplans (i.e. 3:1 or less) respond best to trims which give the sails a pronounced conical form. This entails a fairly slack kicking strap, allowing possibly twice or three times as much lift of the main boom as for windward sailing, and sheets trimmed for boom angles between 25 and 35 deg. This type of trim is associated with heeling angles of up to 25-30 deg., i.e., it is applicable to yachts with an "easy" type of section.

Yachts with high aspect ratio sailplans (over 3:1) and/or a highly stable section, are best sailed upright with the sails set in a form conforming more closely to airfoil technique, i.e., well cambered with a kicking strap set only slightly slacker than the optimum for windward sailing. The boom angle for an exact reach will be up to 40 or even 45 deg.

In tuning up against a yacht of different characteristics, it may prove difficult to assess performance on reaching winds, owing to the different techniques which may have to be employed. Therefore, the "trial horse" should either be a yacht of the same design, or a yacht of a very high standard of off-wind performance. In the latter case, the aim will be to strive to reach this standard of performance by methods best suited to the yacht being tuned-up, and these methods may have to differ considerably from those which are used on the "trial horse".

In conclusion, I would say that it is a mistaken policy to combine racing with tuning-up, at least to any extent. The two processes are so different, and require such different approaches to such different problems, that they cannot be combined except to the extent, that when all possible has been done by the "trial horse" method, the results can only be finally confirmed in racing. It may well be that early experience in racing the new boat may reveal that some of the tuning-up operations need to be repeated, perhaps in a different form, but it is not a good policy to use a race as a means for advanced tuning, since the characteristics of the opposing craft are not likely to be well known, and may well give misleading comparisons.

WHICH SORT OF YACHT IS WHICH is something that can be baffling to newcomers, and we are therefore including the following brief descriptions of

OFFICIAL RACING CLASSES FOR MODEL YACHTS.

There are basically eight classes, six for free-sailing models and two for radio control; one of the six, the 12M, is now virtually non-existent, and support for the 6M has dwindled of recent years. Each class has its own special rules, but brief particulars of each are as follows:

"A" Class

Built to a special formula, "A" boats are normally between 6 and 7 ft. long and between 50 and 70 lb. displacement, with a mast up to 8 ft. in length carrying a sail area averaging around 1,650 sq. in.

Marblehead

Of American origin, Marbleheads are built to the simplest specification, the main features of which are a maximum length of 50 in., and a maximum sail area of 800 sq. in. Displacement is normally between 20 and 24 lb.

6 Metre

These boats are the nearest approach to scale model yachts and are built to rather an involved rule. Length is normally a little over 5 ft., displacement in the order of 32 or 33 lb., plus a crew weight of 2 lb., carrying somewhere between 11 and 1,200 sq. in. of sail.

10 Raters

These boats are also built to a special rule and approximate 6 ft. in length, weigh between 25 and 35 lb., and carry a sail area of roughly 11-1,200 sq. in.

36 in. Restricted

The smallest recognised class, the basic rules being that the hull must fit into a box 36 x 9 x 11 with a maximum displacement of 12 lb. Sail area is unlimited.

Q Class

The "big" class for radio-controlled yachts, these models are in effect converted A Class boats, similar in size and weight to the dimensions given above.

R Class

Most recent of M.Y.A. specifications, yachts to this rule must be between 51 and 65 in. long and from 22 to 30 lb. displacement, with around 1,000 sq. in. of sail.

Three of these classes are recognised internationally, the "A", the 6 metre, and the Marblehead; the last-mentioned is probably the most popular class of model yacht at present in existence.

Would-be yacht builders are advised to contact their local clubs before finally deciding to build a design, since few clubs race every class of model, and there is little point in producing a class boat for which there is no local competition.

Plans for top-quality models fitting all of these classes are available from Model Maker Plans Service.

EVERYONE who starts making models of any kind soon gets to hear of AEROMODELLER & MODEL MAKER PLANS SERVICE and the magnificent full-size working drawings that it offers. The selection numbers over a thousand different model designs, including boats, racing yachts, cars (vintage, veteran, modern and racing), power boats, naval craft, submarines, schooners, marine miniatures, aircraft, gliders, flying boats and workshop accessories—in fact, a fantastic list, which is justly claimed as the widest and finest in the world. Such a list deserves a fine catalogue, and the PLANS HANDBOOK comprises no fewer than 160 pages, 7¼ in. by 4¾ in., with nearly every drawing on offer duly illustrated. In addition, it was found that so many would-be builders had similar queries that now it is more than a catalogue; it is also a text-book in miniature to set newcomers on the right road from the start. In over sixty countries half-a-million copies of previous editions of this Handbook Catalogue have been sold. YOUR COPY is waiting at Model Aeronautical Press Ltd., 38 Clarendon Road, Watford, Herts, and will be sent immediately on receipt of your postal order for 2s.

Articles by experts cover the most usual sources of difficulty and deal with such subjects as :

BUILDING FROM PLANS : SCALING PLANS UP OR DOWN : STARTING & OPERATING DIESEL & GLOW PLUG ENGINES : DOPING : TRIMMING FOR FLIGHT : RADIO CONTROL FOR BOATS : RADIO CONTROL FOR AIRCRAFT : F.A.I. REQUIREMENTS : PLASTIC MOULDING : DATA ON THE WORLD'S MODEL I.C. ENGINES : COVERING WITH SILK : and a host of other useful items of information.

Latest fully illustrated catalogue and handbook featuring over 1,000 plans. Group headings include the following main divisions : FLYING SCALE AIRCRAFT in every category : FREE FLIGHT POWER : CONTEST POWER : A2, OPEN-CLASS & A/1 GLIDERS : RUBBER MODELS : WATERPLANES : INDOOR MODELS : RADIO CONTROL : CONTROL LINE SPORT, SPEED, STUNT, TEAM RACING : SOLID SCALE PLANS : RACING YACHTS : SAILING CRAFT : POWER BOATS : AIR-SCREW DRIVEN HYDROPLANES : STEAM ENGINES : CARS including PROTOTYPE PLANS : HOVERCRAFT : MARINE MINIATURES : BOOKS FOR MODELLERS.

Printed by : BLETCHLEY PRINTERS LTD., Central Gardens, Bletchley, Bucks.